WALL HEAD DETAILS

(BASED ON DESIGN REQUIREMENTS)

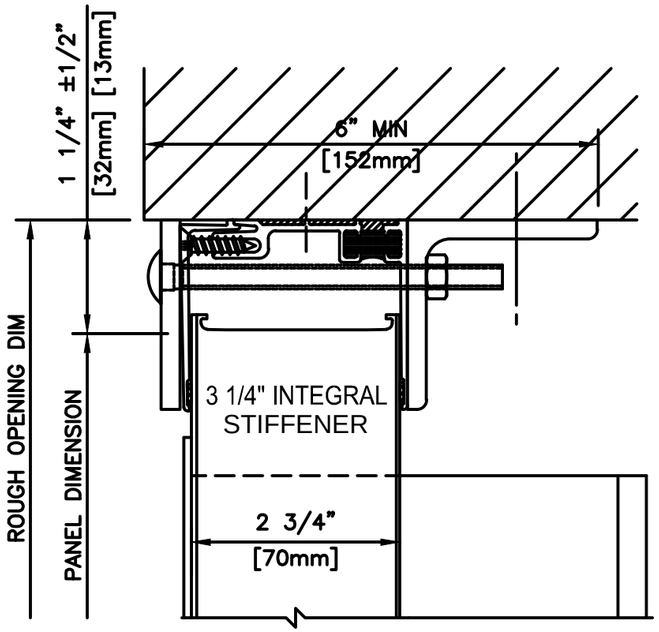

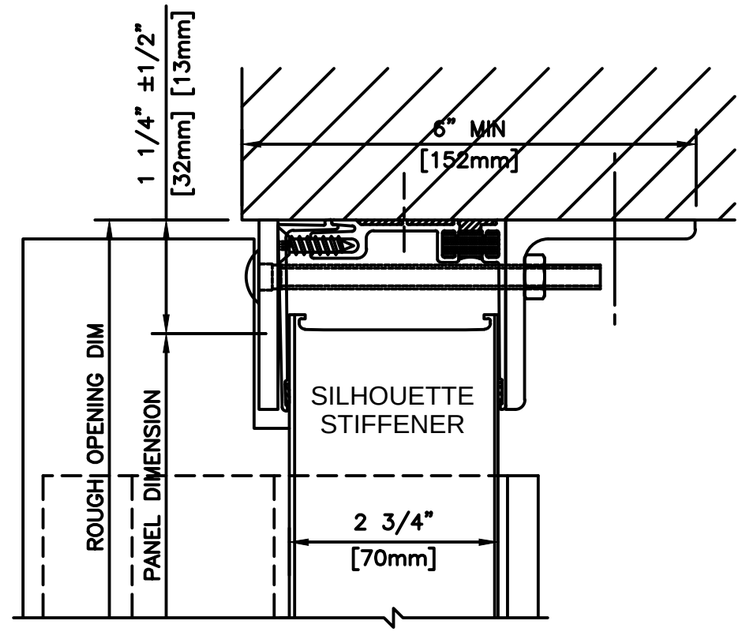

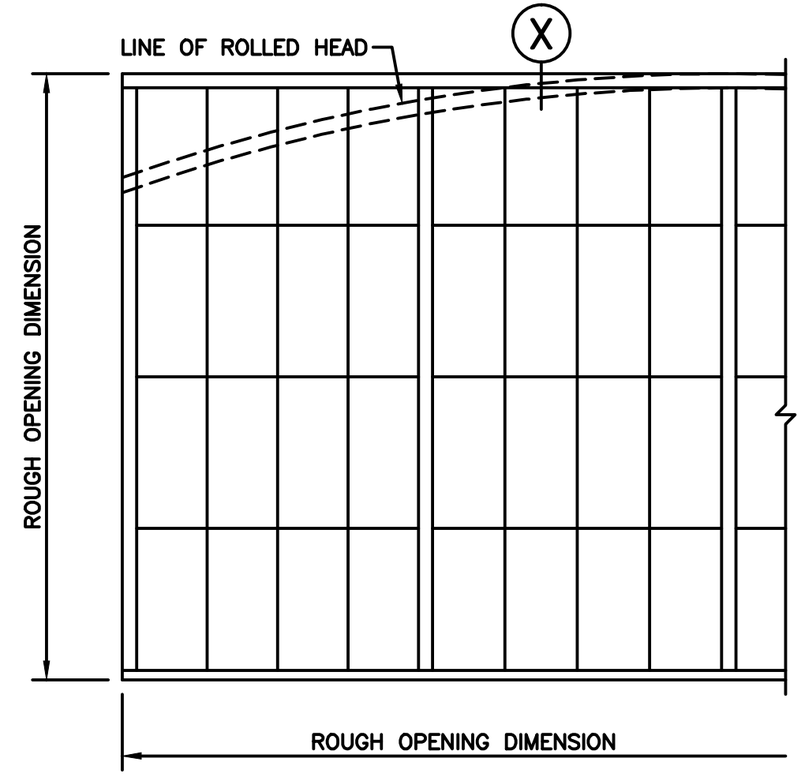

WALL ELEVATION

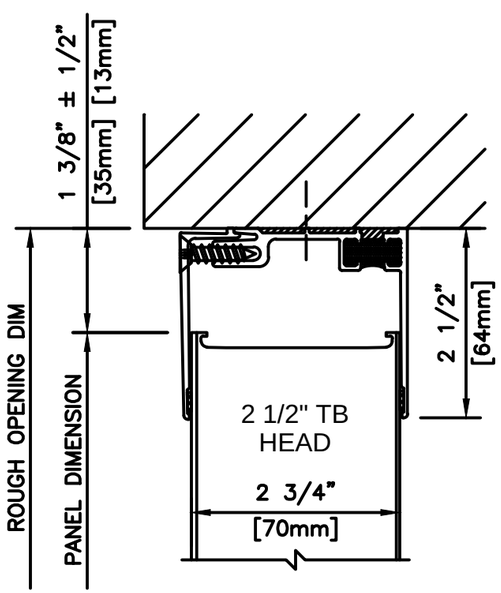

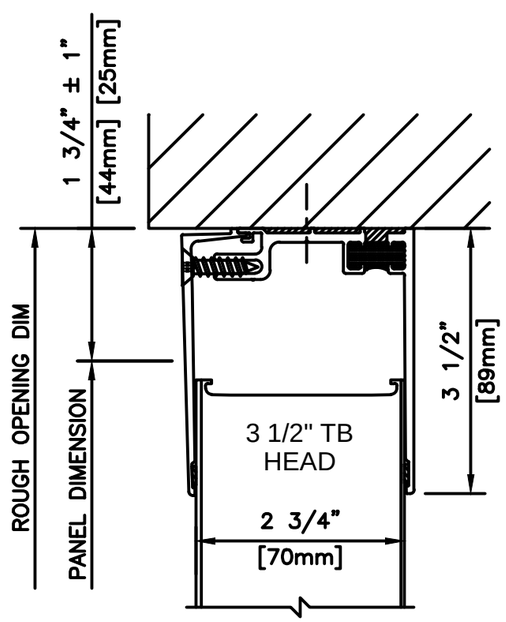

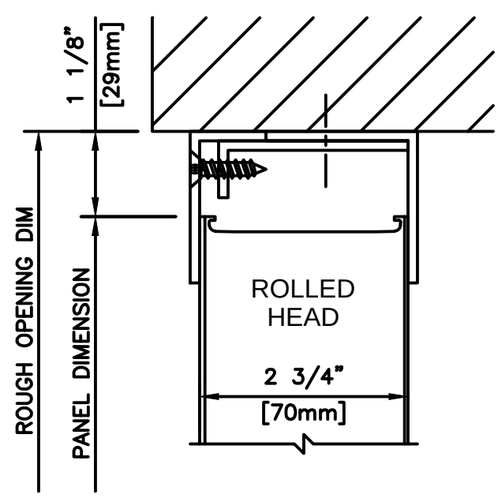

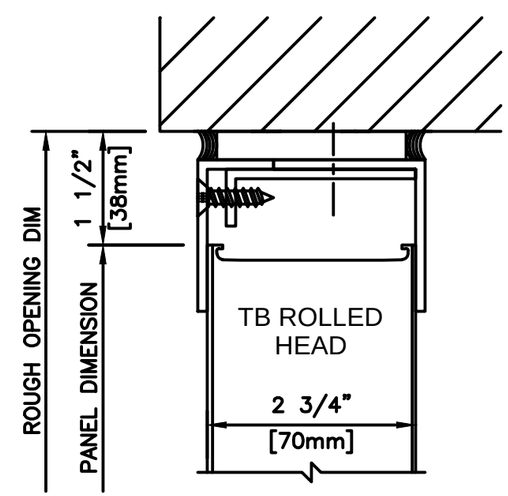

KALWALL®

high performance translucent building systems