KALWALL 2 3/4" [70mm] DRAINABLE LOUVER

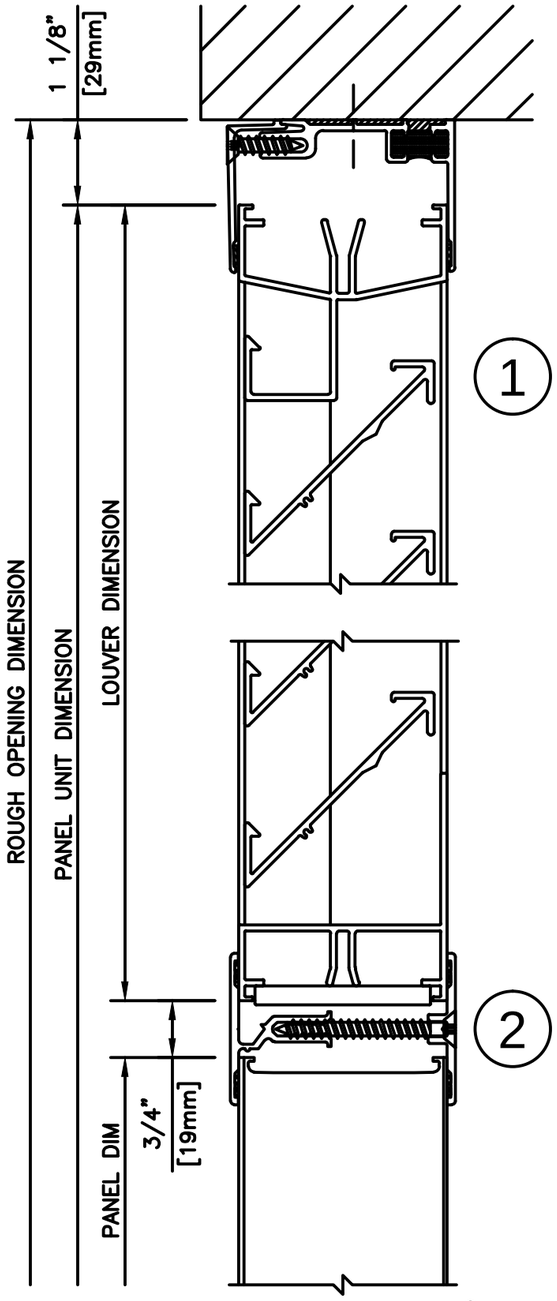

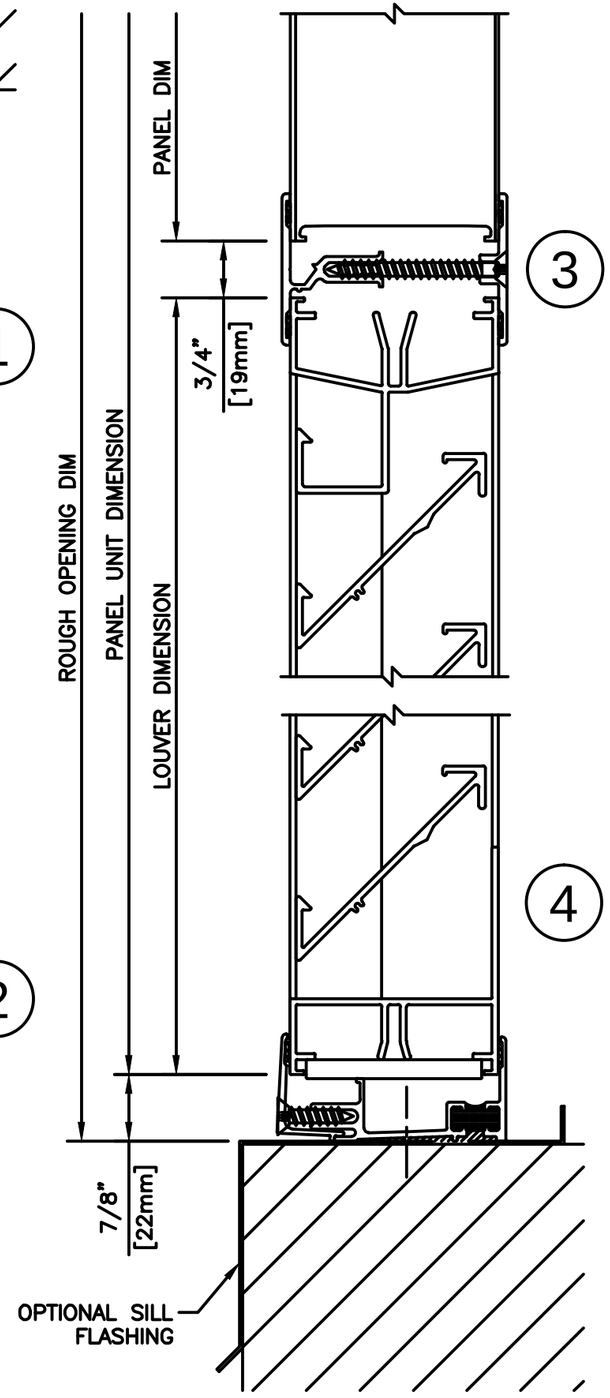

1. SPECIFICATIONS
   6063-T6 EXTRUDED ALUM
   ALL WELDED CONSTRUCTION
2. FINISH
   MILL, KCRF OR ANODIZED
3. SCREENS/BLANK OFF PLATE
   (A) BIRD SCREENS
   3/4"[19mm] FLAT. EXPANDED
   ALUM. .051"[1.3mm THICK]
   (B) INSECT SCREENS
   18 X 16 ALUMINUM MESH
   (C) .063 ALUM BLANK OFF PLATE
4. DIMENSIONS NOTE: RECTANGULAR ONLY
   WIDTH: MIN. 10"[254mm]
   MAX. 60"[1524mm]
   HEIGHT: MIN. 6 1/8"[156mm]
   MAX 96"[2438mm]
   BLADES SPACING: 2 1/16"[52mm] NOM.
5. FREE AREA
   48"[1219mm]W x 48"[1219mm]H 6.38 f ²[.593 m²], 40%
6. BEGINNING POINT OF WATER PENETRATION
   1,229.6 f/m (7,845 f ³/m)[2391 m/min (34.82 m ³/min)]
7. PRESSURE DROP

	H₂O	f/min	f³/min	m/min	m³/min
IN	.612"/15.54mm	2,000.3	12,762	609.69	361.4
	.051"/1.29mm	571	3,643	174	103.2
OUT	.439"/11.15mm	2,000.5	12,763	609.75	361.4
	.051"/1.29mm	680.2	4,340	207.32	122.9

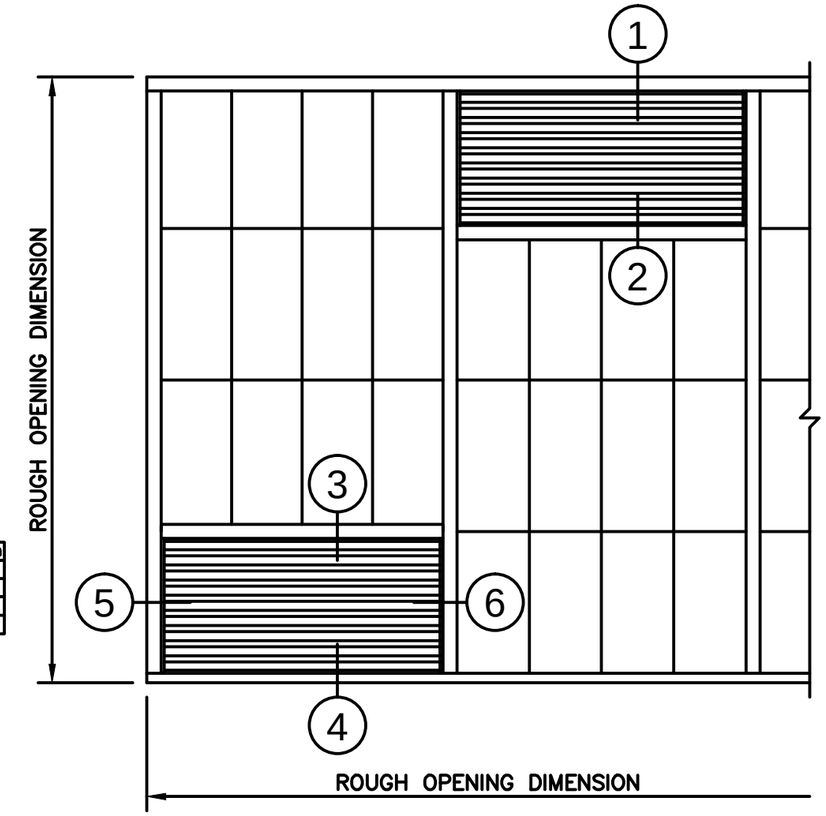

WALL ELEVATION

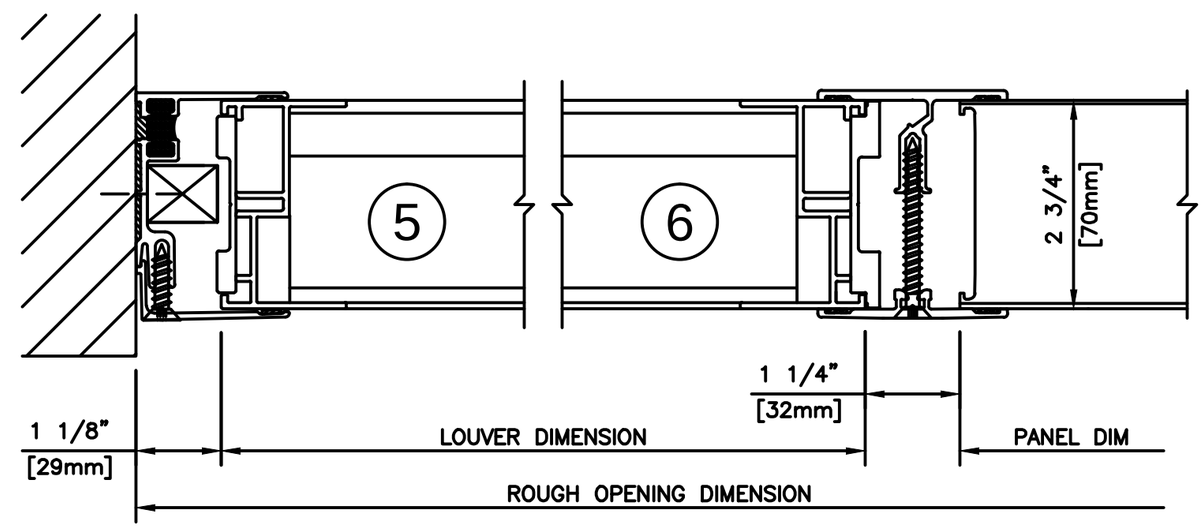

KALWALL®

high performance translucent building systems

Facades ● Window Replacement ● Drainable Louver